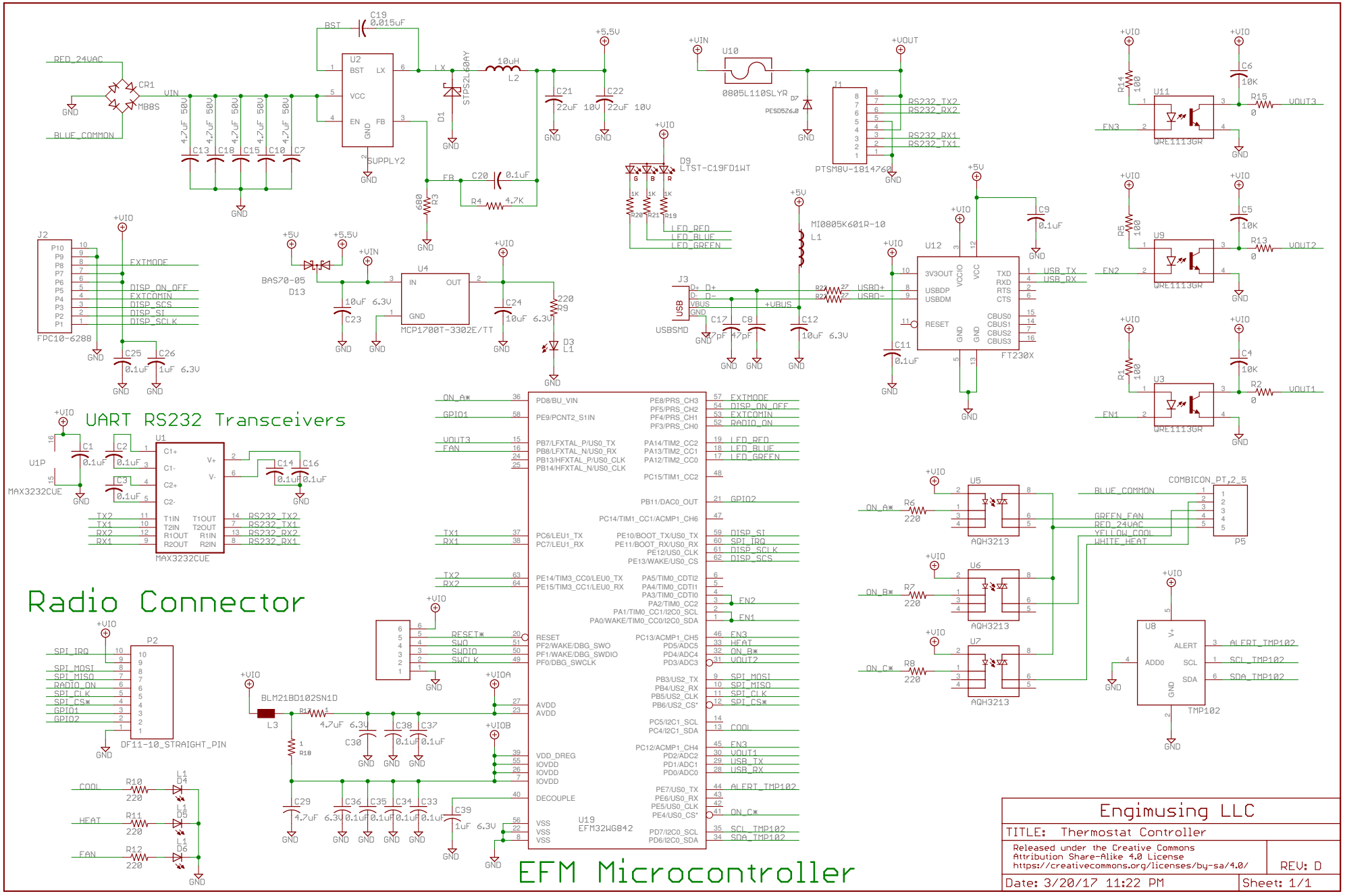
UART RS232 Transceivers
Radio Connector
EFM Microcontroller
U2
U4
U10
U12
U11
U9
U3
U1
U19
EFM32WG842
MCP1700T-3302E/TT
0805L110SLYR
PTSM8V-1814760
FT230X
MAX3232CUE
FPC10-6288
DF11-10_STRAIGHT_PIN
COMBICON_PT,2_5
TMP102
AQH3213
QRE1113GR
MI0805K601R-10
LTST-C19FD1WT
STPS2L60AY
BAS70-05
USBSMD
RED_24VAC
BLUE_COMMON
Engimusing LLC
TITLE: Thermostat Controller
Released under the Creative Commons
Attribution Share-Alike 4.0 License
https://creativecommons.org/licenses/by-sa/4.0/
REV: D
Date: 3/20/17 11:22 PM
Sheet: 1/1